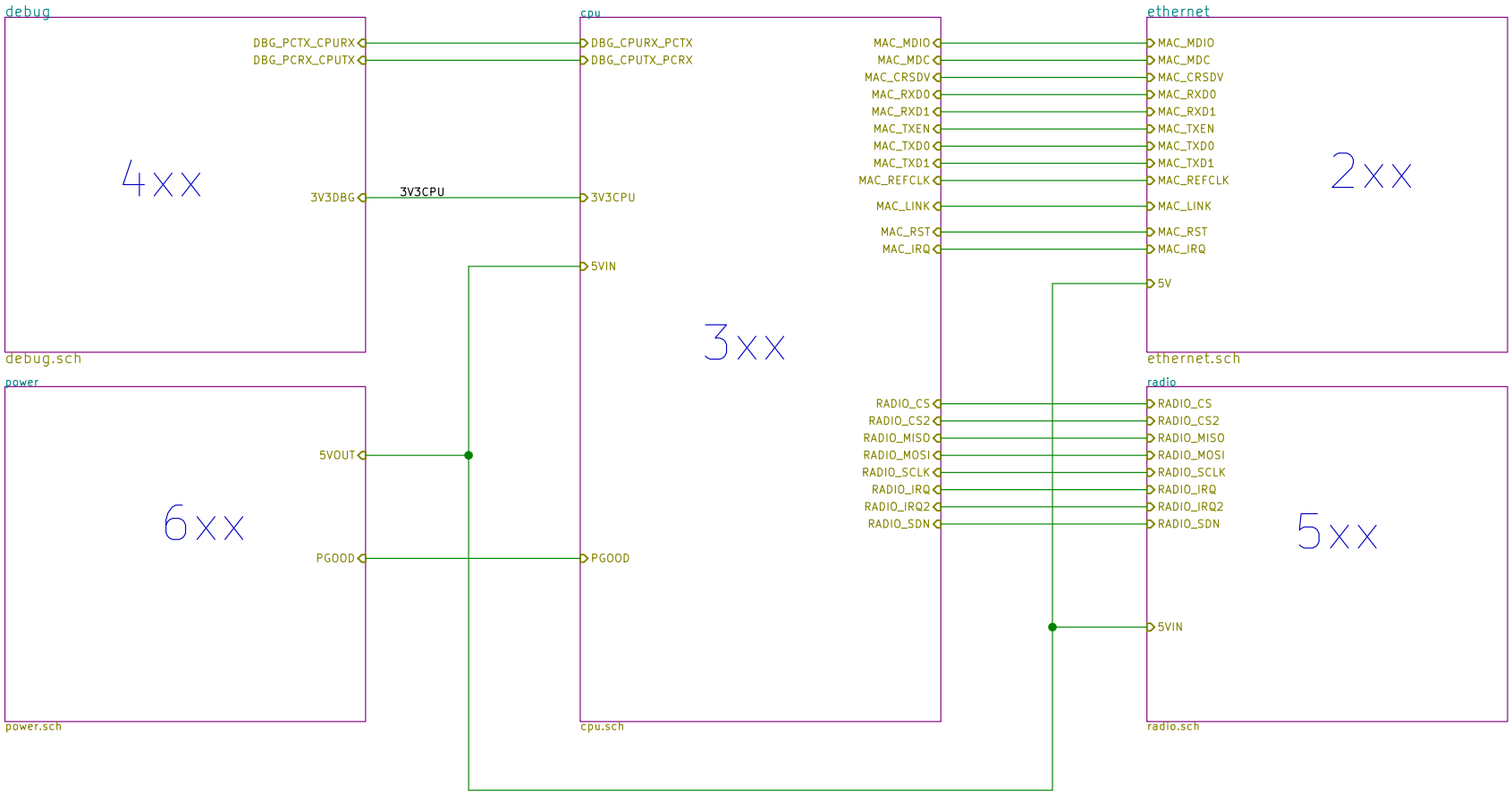

CERN OHL
F4GRX

Sheet: /
File: ap.sch

Title: Radio gateway (overview)

Size: A4	Date: 2017-05-19	**Rev: 1**
KiCad E.D.A. kicad 4.0.7		Id: 1/6

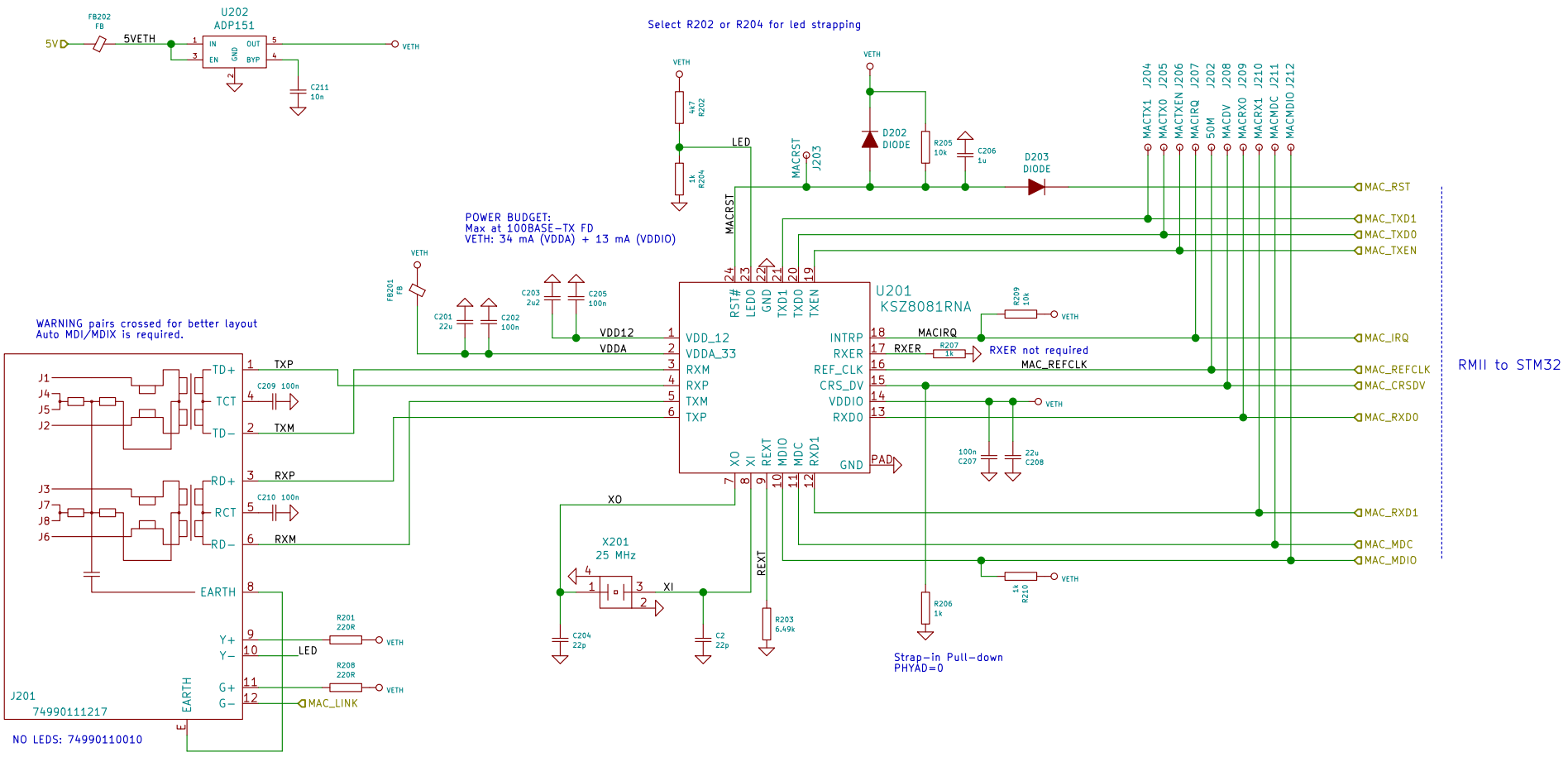

Ethernet interface

CERN OHL	
F4GRX	
Sheet: /ethernet/	
File: ethernet.sch	
Title: Radio gateway (Ethernet interface)	
Size: A4	Date: 2017-05-19
KiCad E.D.A. kicad 4.0.7	Id: 2/6
	Rev: 1

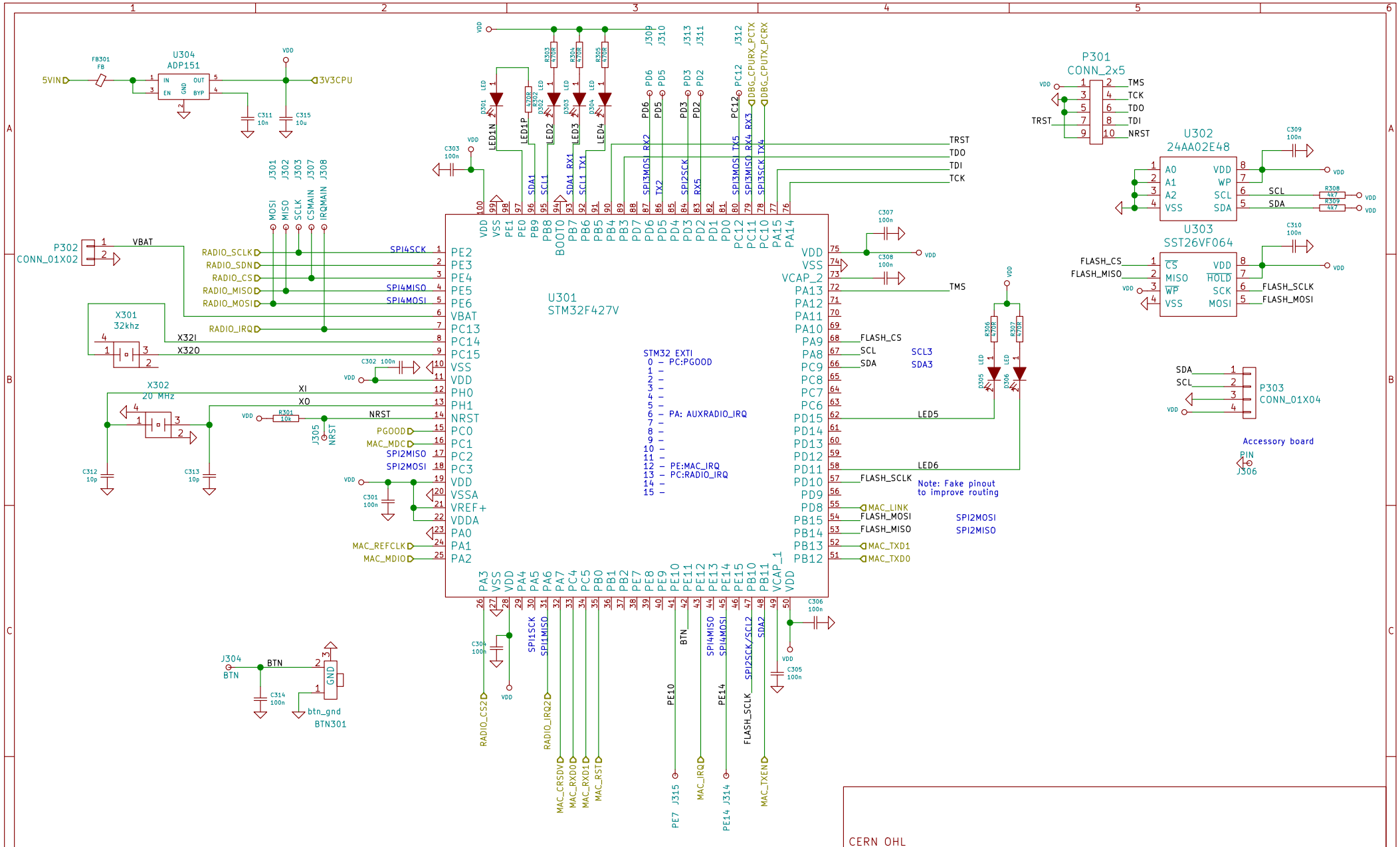

CERN OHL

F4GRX

Sheet: /cpu/

File: cpu.sch

Title: Radio gateway (CPU)

Size: A4	Date: 2017-05-19	**Rev: 1**
KiCad E.D.A. kicad 4.0.7		Id: 3/6

CPU

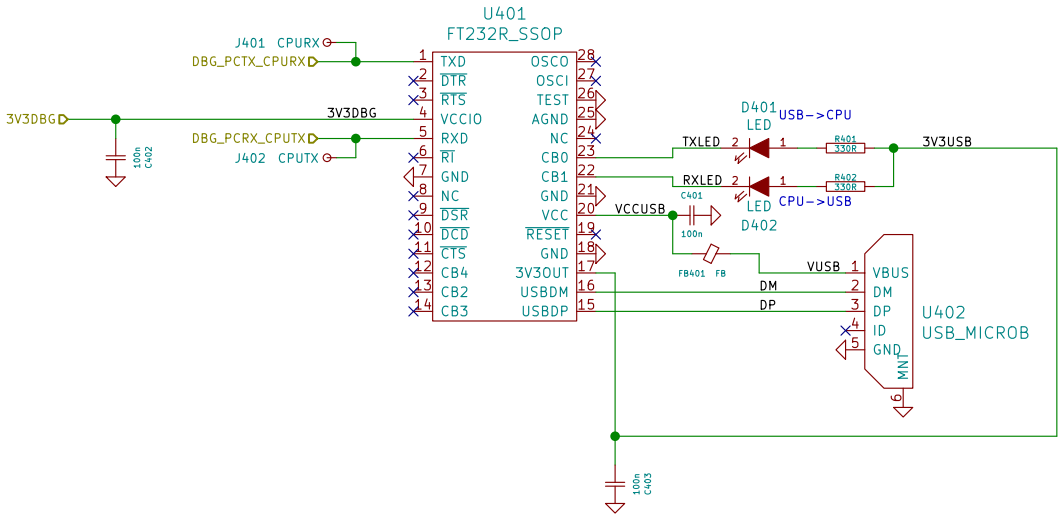

DEBUG

CERN OHL
F4GRX

Sheet: /debug/
File: debug.sch

Title: Radio gateway (Debug UART)

Size: A4	Date: 2017-05-19	**Rev: 1**
KiCad E.D.A. kicad 4.0.7		Id: 4/6

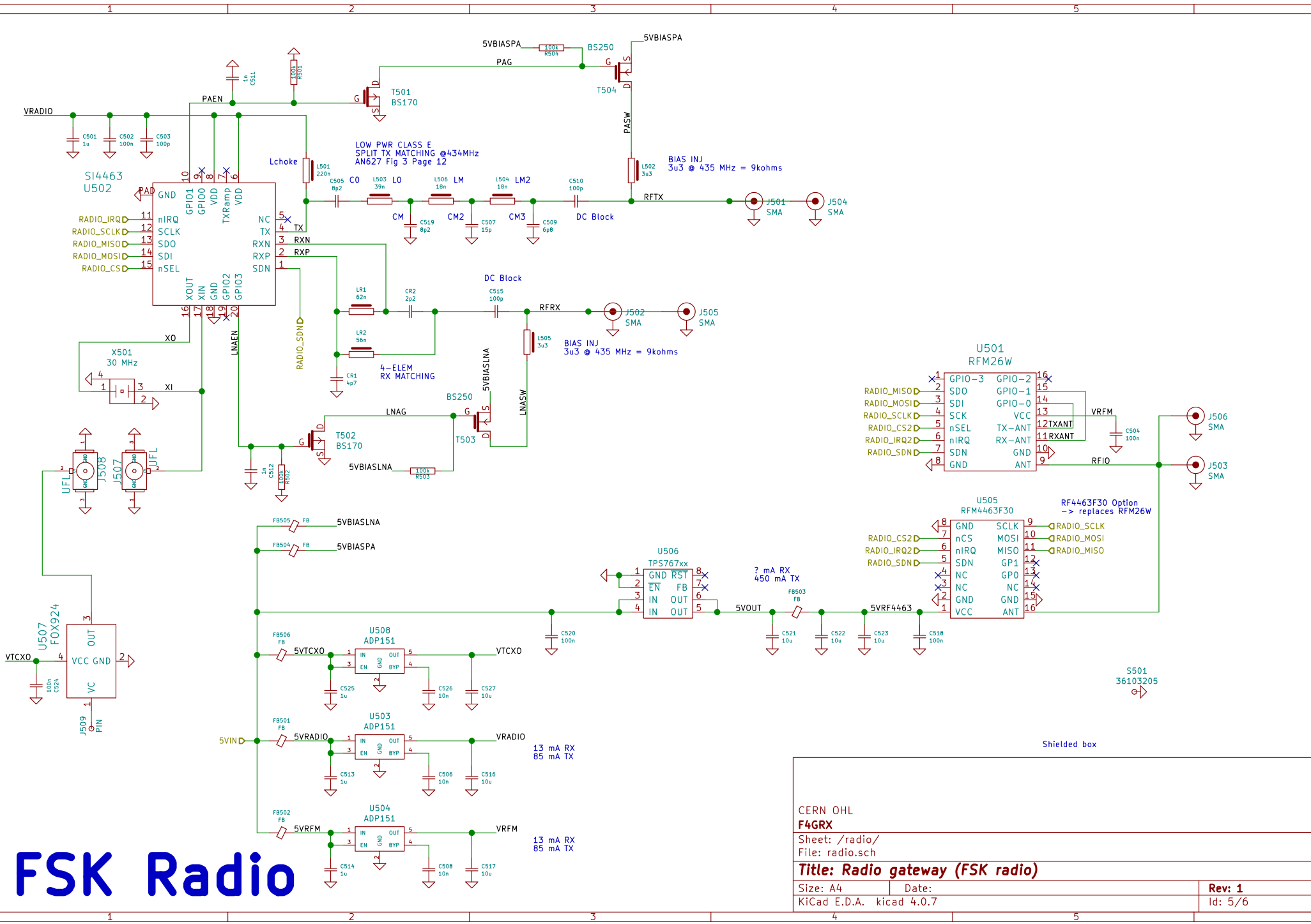
FSK Radio
SI4463
U502
LOW PWR CLASS E
SPLIT TX MATCHING @434MHz
AN627 Fig 3 Page 12
BIAS INJ
3u3 @ 435 MHz = 9kohms
DC Block
4-ELEM
RX MATCHING
X501
30 MHz
U501
RFM26W
U505
RFM4463F30
RF4463F30 Option
-> replaces RFM26W
U506
TPS767xx
? mA RX
450 mA TX
U507
FOX924
U508
ADP151
U503
ADP151
U504
ADP151
13 mA RX
85 mA TX
S501
36103205
Shielded box
CERN OHL
F4GRX
Sheet: /radio/
File: radio.sch
Title: Radio gateway (FSK radio)
Size: A4
Date:
Rev: 1
KiCad E.D.A. kicad 4.0.7
Id: 5/6

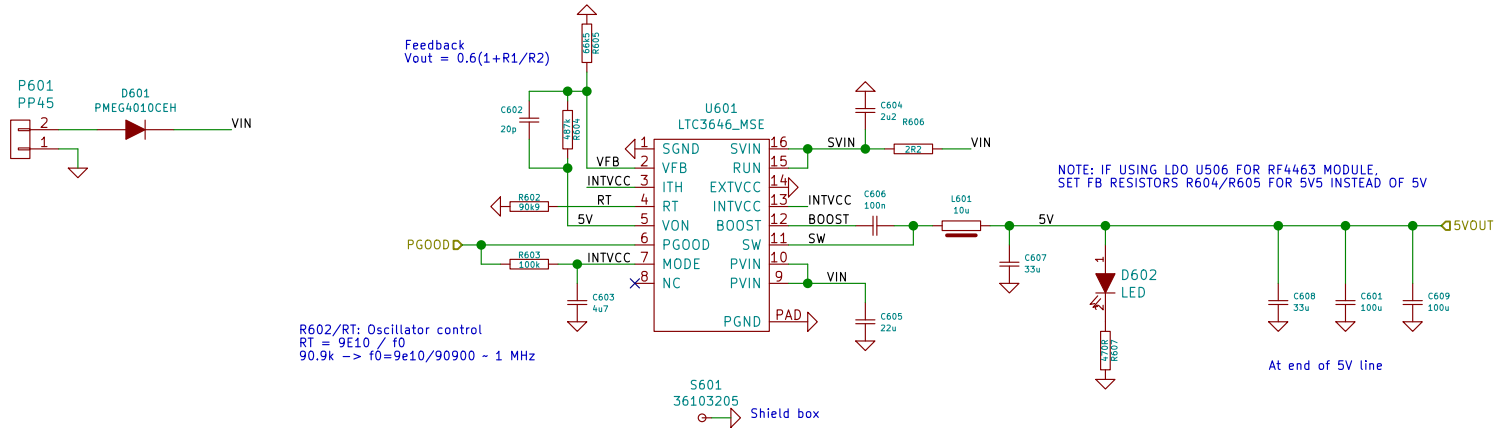

Power

CERN OHL	
F4GRX	
Sheet: /power/	
File: power.sch	
Title: Radio gateway (Power supply)	
Size: A4	Date: 2017-07-05
KiCad E.D.A. kicad 4.0.7	Id: 6/6
	Rev: 1